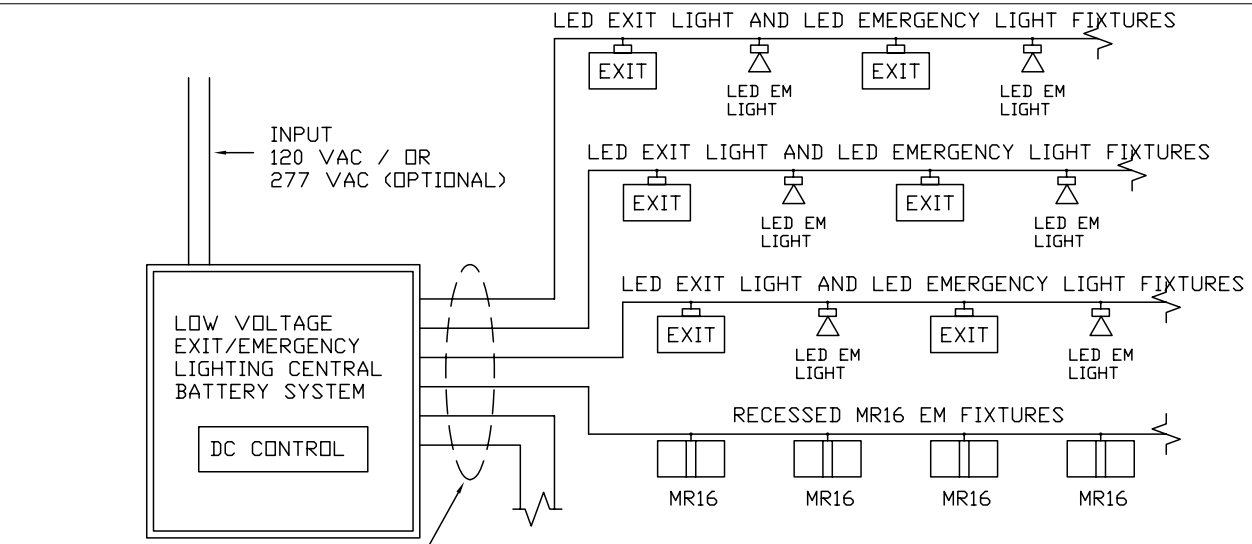

CLASS 2 LOW VOLTAGE WIRING
OUTPUT TO 24 VDC
UP TO 6 CIRCUITS
AVAILABLE
ROUTE ON J-HOOKS IN
ACCESSIBLE CEILINGS

LED EXIT AND LED EM FIXTURES: #10AWG/3 OR #10AWG/4*
RECESSED MR16 EM FIXTURES: #8 AWG/2
* REQUIRED FOR NIGHT LIGHTING FIXTURES

24 VDC CIRCUIT: GREEN: COMMON GND: 24 VDC NEG
WHITE: EXITS & CVRE: 12-24 VDC POS
RED: EMERGENCY: 24 VDC POS
BLACK: SECURITY/ NIGHT LIGHTING: 24 VDC POS

NOTE

1. THE POWER RATING & TOTAL QUANTITY OF FIXTURES CONNECTED TO ONE CENTRAL BATTERY SYSTEM ARE TO BE PER MANUFACTURER'S INSTRUCTIONS & MAX LOAD IS TO BE LESS THAN 75% OF CENTRAL BATTERY CAPACITY.
2. LED EM LIGHTS ARE TO OPERATE AS EGRESS LIGHTING FIXTURES UPON LOSS OF AC LINE POWER TO THE CENTRAL BATTERY PANEL. EXIT LIGHTING WILL BE ILLUMINATED AT ALL TIMES.
3. LED EMERGENCY LIGHTS WITH NIGHT LIGHTING FUNCTION SHALL BE POWERED BY A DC POWER SUPPLY LOCATED IN THE BATTERY PANEL & CONTROLLED EITHER BY AN EXTERNAL BUILDING MANAGEMENT SYSTEM, A TIME CLOCK SWITCH LOCATED ON THE CENTRAL BATTERY PANEL, OR A PHOTOCELL SWITCH MOUNTED ON THE FIXTURE.
4. FOR LED EMERGENCY LIGHTS, USE #10 AWG/3 CLASS 2 LOW VOLTAGE WIRING. FOR FIXTURES REQUIRING NIGHT LIGHTING MODE, USE #10 AWG/4 WIRING. SEE NOTE 6.
5. FOR MR16 LAMP EMERGENCY LIGHTS ON A DEDICATED CIRCUIT, USE #8 AWG/2 WIRING. SEE NOTE 6.
6. THE ABOVE WIRE SIZES ARE BASED ON REASONABLE ESTIMATES FOR THIS PROJECT. CONFIRM THE WIRE SIZES RECOMMENDED CONFORM TO MANUFACTURER'S INSTRUCTIONS & VOLTAGE DROP TABLES FOR ACTUAL CIRCUIT LENGTHS & FIXTURE LOADS.

LOW VOLTAGE EGRESS/EXIT EMERGENCY LIGHTING DETAIL

NO SCALE

REV-2